ASSEMBLY INSTRUCTIONS:

1. ASSEMBLE DAMPER SHAFT ASSEMBLY TO PRESSURE TUBE
2. FILL CARTRIDGE 1/2 FULL WITH OIL
3. STROKE DAMPER SHAFT 5X, THEN TOP OUT DAMPER SHAFT
4. FILL OIL HEIGHT TO PRESSURE TUBE BLEED HOLE
5. TOPCAP ASSY
   - A. SET HSC & LSC FULL OPEN
   - B. SLOWLY PUSH INTO PRESSURE TUBE AND ENGAGE TOPCAP THREADS
   - C. ROTATE TO ENGAGE 1-2 THREADS
6. TORQUE TOPCAP AND SEALHEAD ASSEMBLIES
7. STROKE DAMPER SHAFT APPROXIMATELY 75% OF MAX DAMPER TRAVEL TO EXPELL EXCESS OIL
8. FACTORY SETTINGS:

   HSR: 4 CLICKS FROM CLOSED
   LSR: 6 CLICKS FROM CLOSED
   HSC: 10 CLICKS FROM CLOSED
   LSC: 6 CLICKS FROM CLOSED

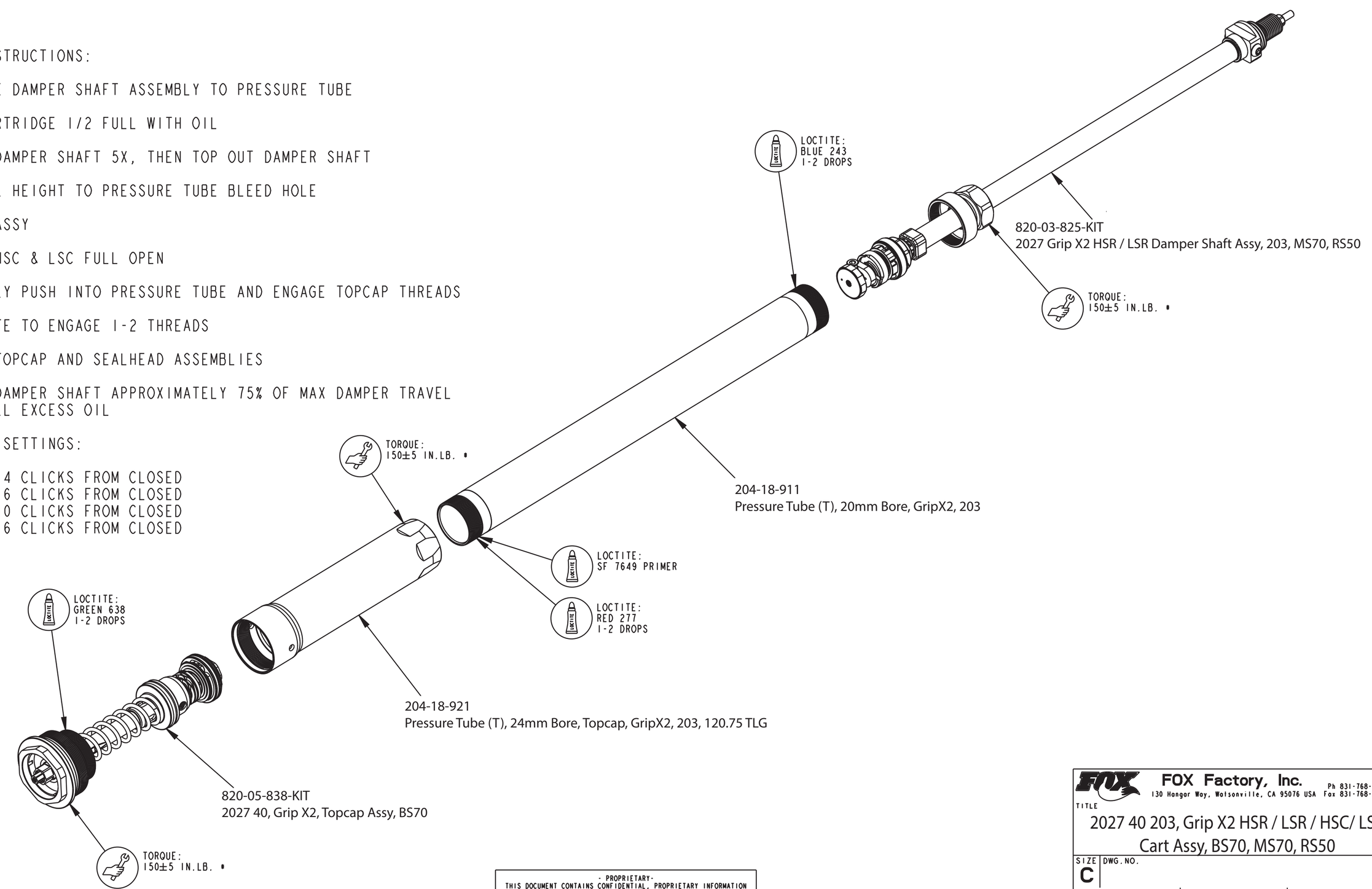

- PROPRIETARY-
THIS DOCUMENT CONTAINS CONFIDENTIAL, PROPRIETARY INFORMATION THAT IS FOX PROPERTY. DO NOT DISCLOSE TO OR DUPLICATE FOR OTHERS EXCEPT AS AUTHORIZED BY FOX.

FOX Factory, Inc.
130 Hangar Way, Watsonville, CA 95076 USA
Ph 831-768-1100
Fax 831-768-9312

TITLE
2027 40 203, Grip X2 HSR / LSR / HSC/ LSC Cart Assy, BS70, MS70, RS50

SIZE C | DWG. NO.

PLOT SCALE 1:1 | SHEET 1 OF 1

ProE ASSEM